CW Power TX for 122 and 134 GHz

Michael Kuhne DB6NT 12.2021

Most of the millimeter wave mixers used in the amateur radio sector are subharmonic mixers that are also used for transmission. The transmission power generated in this way is usually around 0.2 mW SSB or even less. Power amplifier chips for these frequencies are offered by **Teledyne**. These chips achieve a power of over 200 mW at 23 dB gain (TSC 115-145G-5S4C). However, these parts are very difficult to get and even more difficult to work with. Standard bond devices are no longer sufficient here.
Another possibility to generate a strong CW transmission signal is the frequency multiplication method. I have already described some possibilities in previous publications. A frequency doubler from **VDI** was available to me, which promises an output power of approx. 200 mW at 122-134 GHz. For this, however, a control power of 0.5-0.6 watts must be generated at 61-67 GHz. The efficiency of this doubler is given as approx. 30%.

The search for a suitable amplifier that would generate this power was very time-consuming. Finally, I found what I was looking for at **gotMIC**. This company produces a wide range of chips for the 60 GHz band. I have already used two of them as multipliers in my previous CW transmitters. When I asked about this chip **gAPZ0079**, I got the information that there is a similar amplifier also available as an SMD version in a soldering case, type: **gMPA0038A**. This version is much more expensive, but of course much easier to work with. I decided in favor of this SMD version.

It should be mentioned here that the procurement of the information required for developing the amplifier, receiving an offer and the parts was very difficult and time-consuming ...!

Then again the shortened description of the already existing multiplier that is to be used to control the 60 GHz power amplifier.

<u>122 - 134 GHz signal generation:</u>
A CW transmitter that uses a diode frequency doubler for 122 and 134 GHz requires 61 and 67 GHz as the control frequency. In my search for suitable chips for these frequencies I found the six-fold **gXSB0019A** and the power amplifier **gAPZ0039A** from **gotMIC** from Gothenburg (Sweden). With a control of 15 mW (10 or 11.2 GHz), this combination promises an output power of> 100 mW for controlling a power amplifier and then a power frequency doubler.

The circuit board is made of RT5870, 0.12mm and soldered to a previously machined brass plate. The places for the chips and capacitors are milled out after soldering. The power supply is mounted in the cover. This consists of a step-down converter (OKR-T / 3 series) and a negative voltage generator with the LT1054 IC.

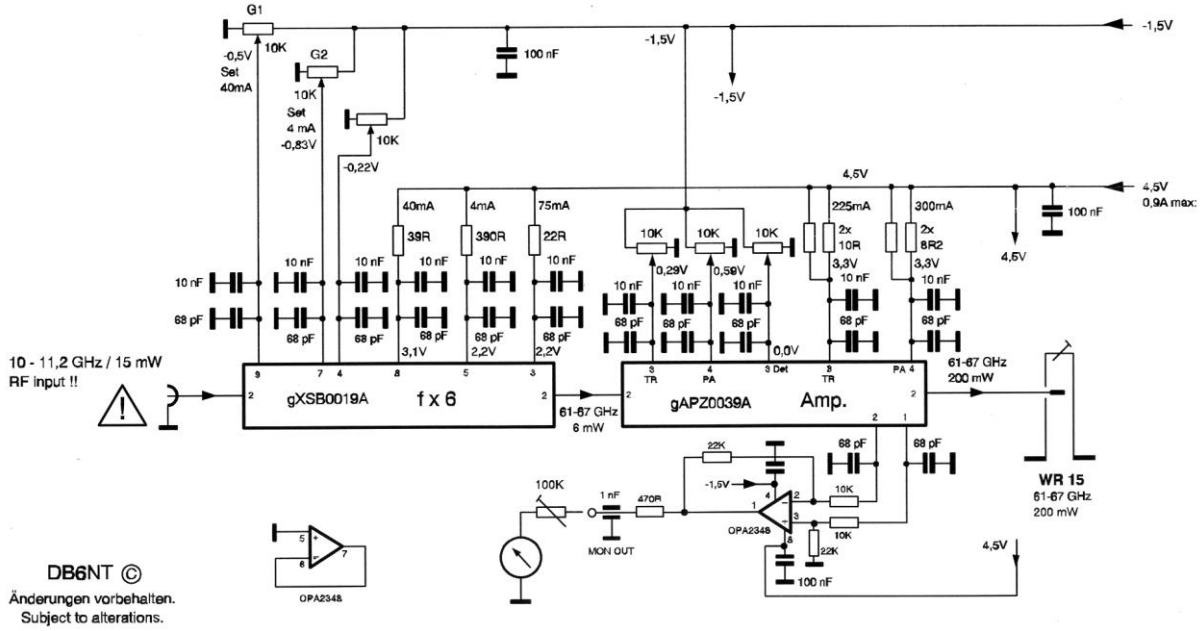

The voltage specifications are without HF control of the circuit.

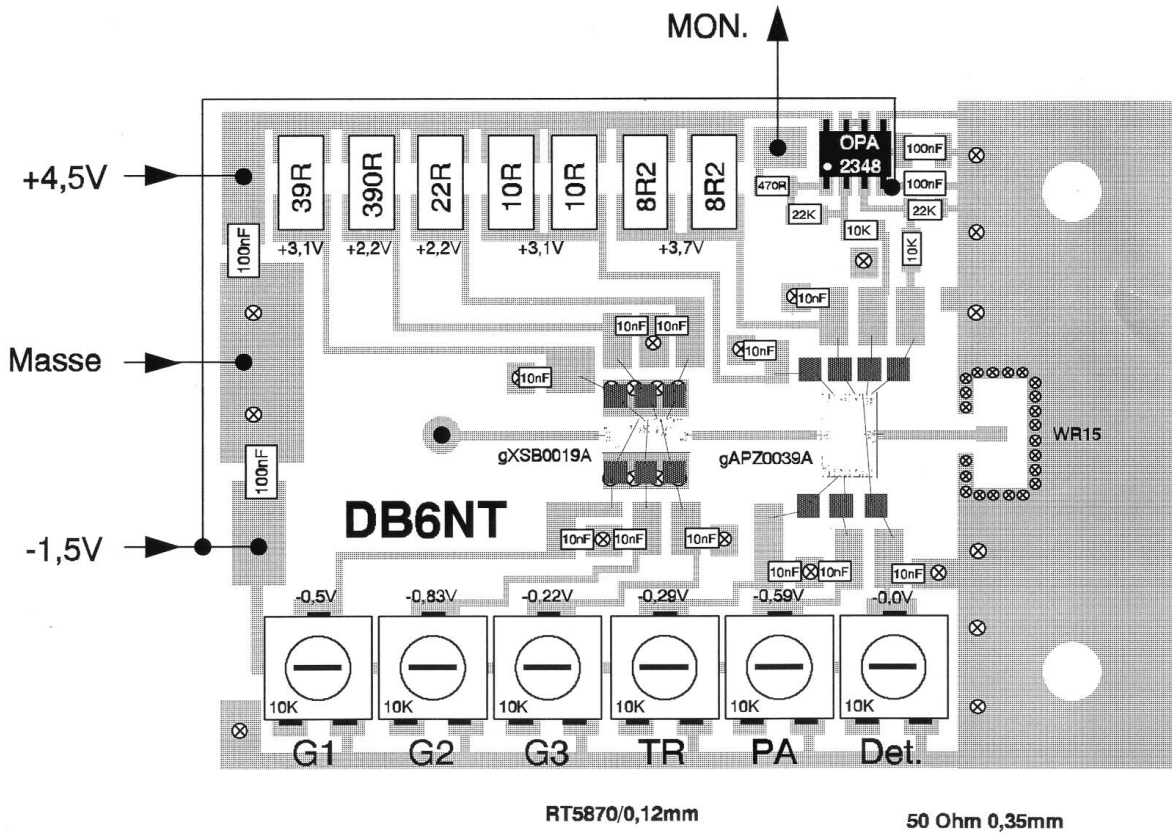

3 units of this assembly were built, the achieved HF output powers are comparable.

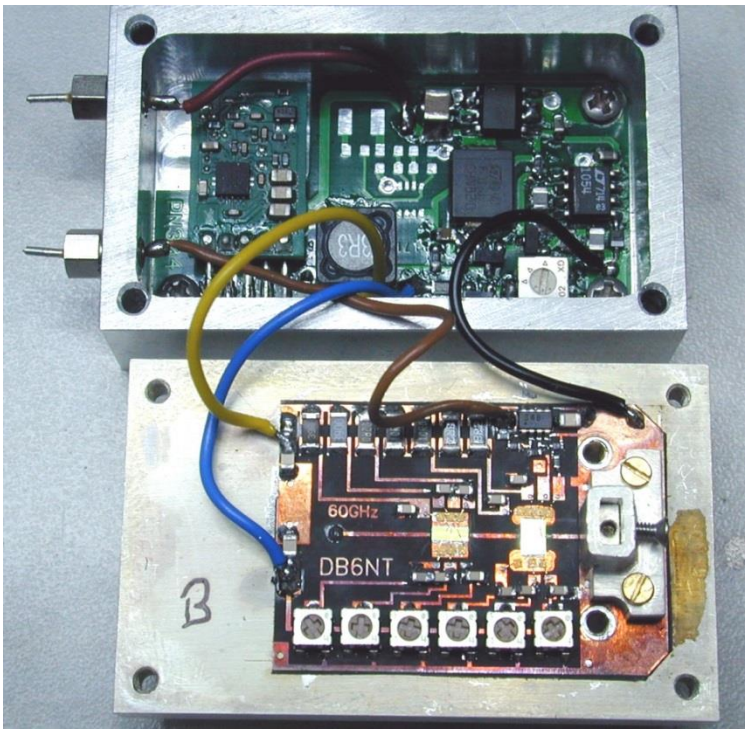
60GHz
DB6NT
B

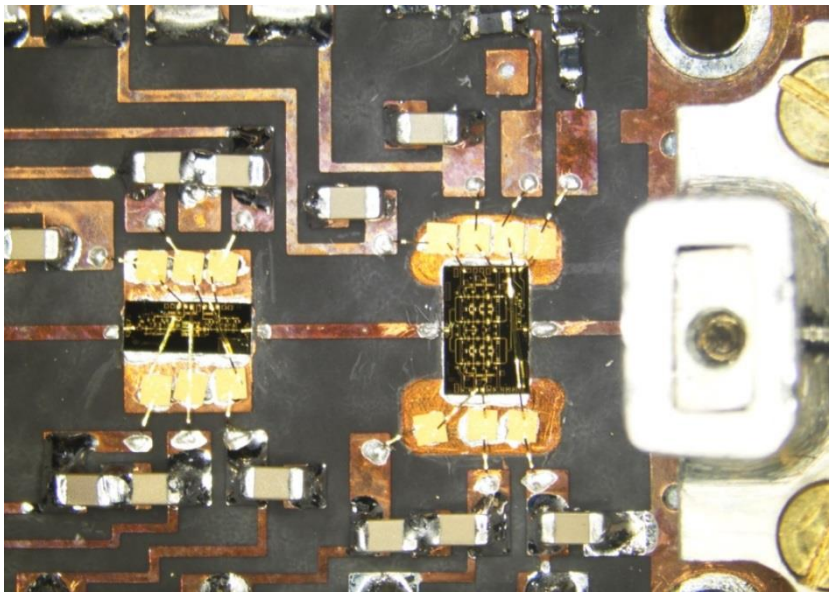

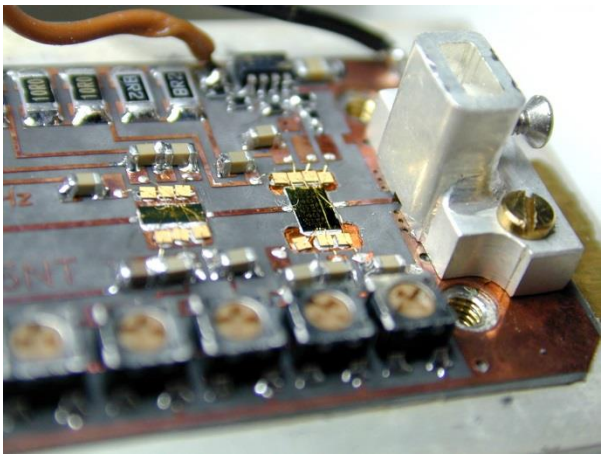

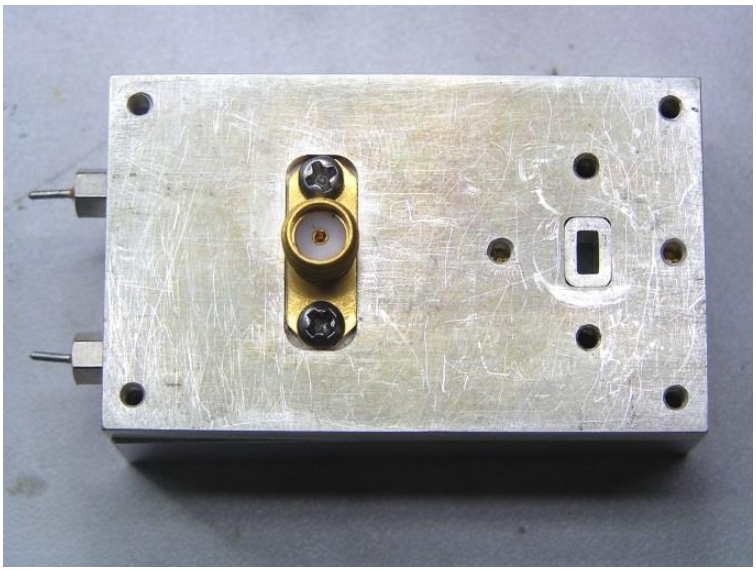

V-band amplifier with 500 mW output power:

Here are the short data of the 60 GHz MMIC SMD amplifier.

PRELIMINARY gMPA0038A
SMD V-Band Power Amplifier
57-71 GHz (56-72 GHz)

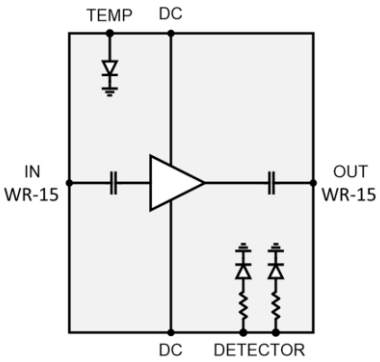

FEATURES

- SMD package (WR-15 interface)
- V-band coverage
- Gain: 14 dB
- P1dB/PSAT: 26.5/27.5 dBm
- OIP3: 36.5 dBm
- Integrated detector
- Size: 12 x 15 x 4 mm

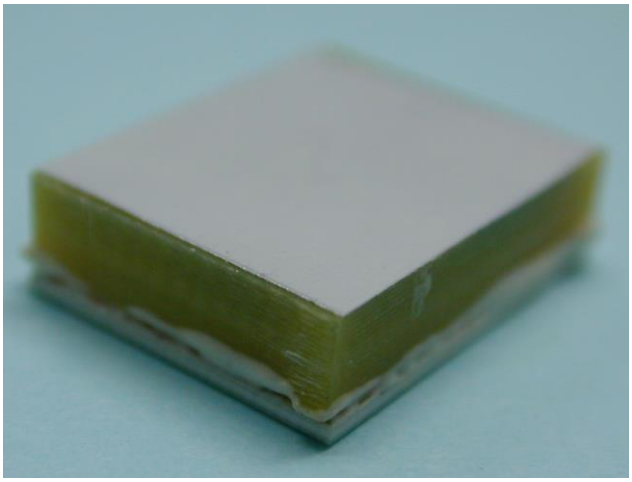

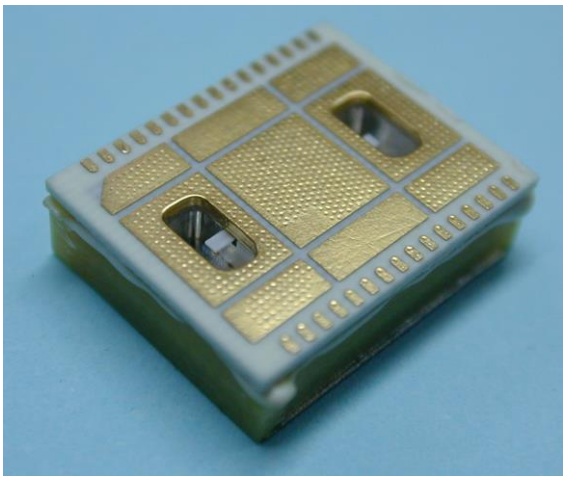

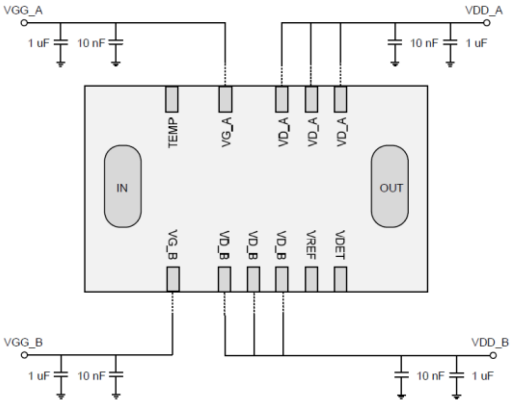

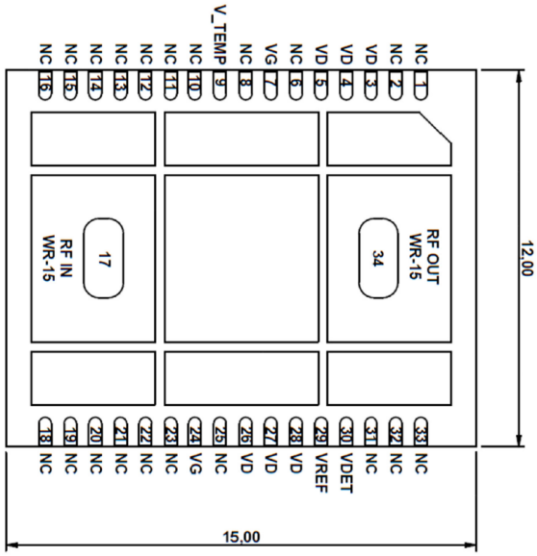

The amplifier is set up on a 5 mm thick brass plate. The corresponding waveguides for coupling and decoupling the signal are milled into the plate. The SMD amplifier is then glued on with conductive silver adhesive **H20S**. This type of assembly ensures very good HF contact and optimal cooling of the component. After all, a waste heat of approx. 5 watts has to be dissipated. On the side you can see M2 threads for mounting a heat sink.

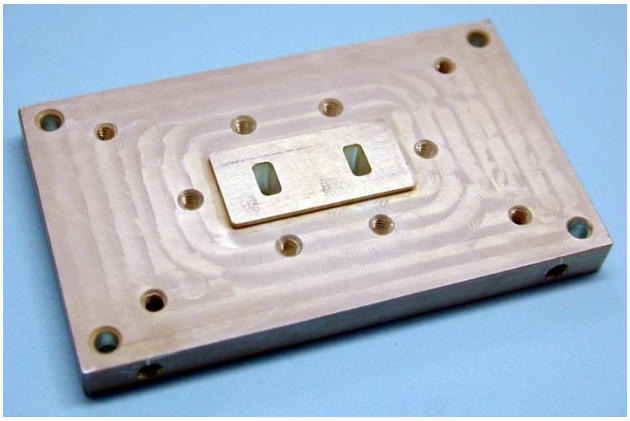

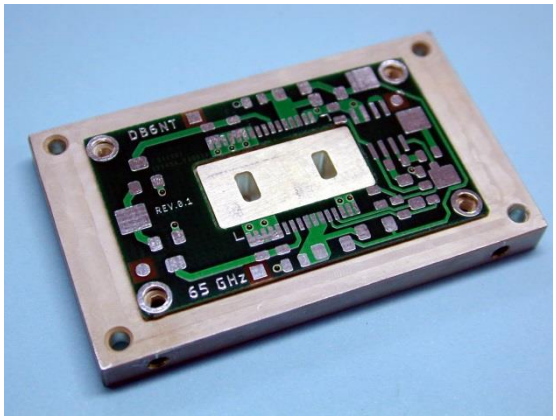

In the photo on the right, the PCB is placed, which will later be used for supplying the supply voltage.

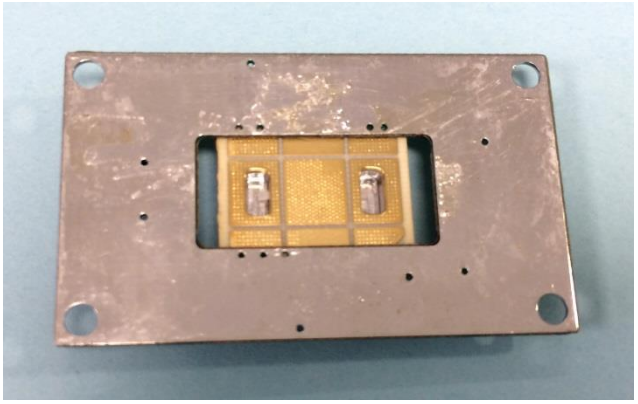

Here is the assembled amplifier from below.

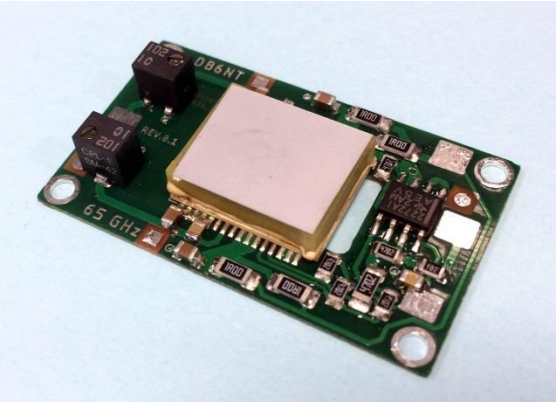

The fully assembled PCB from above.

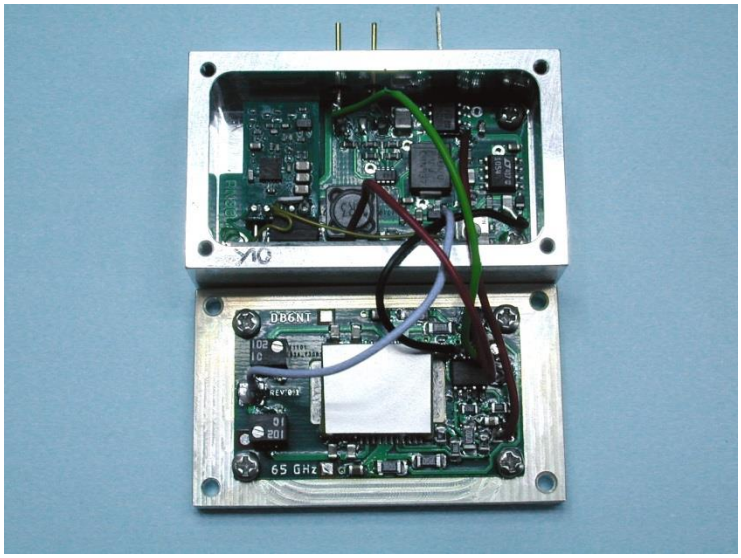

The fully assembled amplifier with the required power supply in the lid.

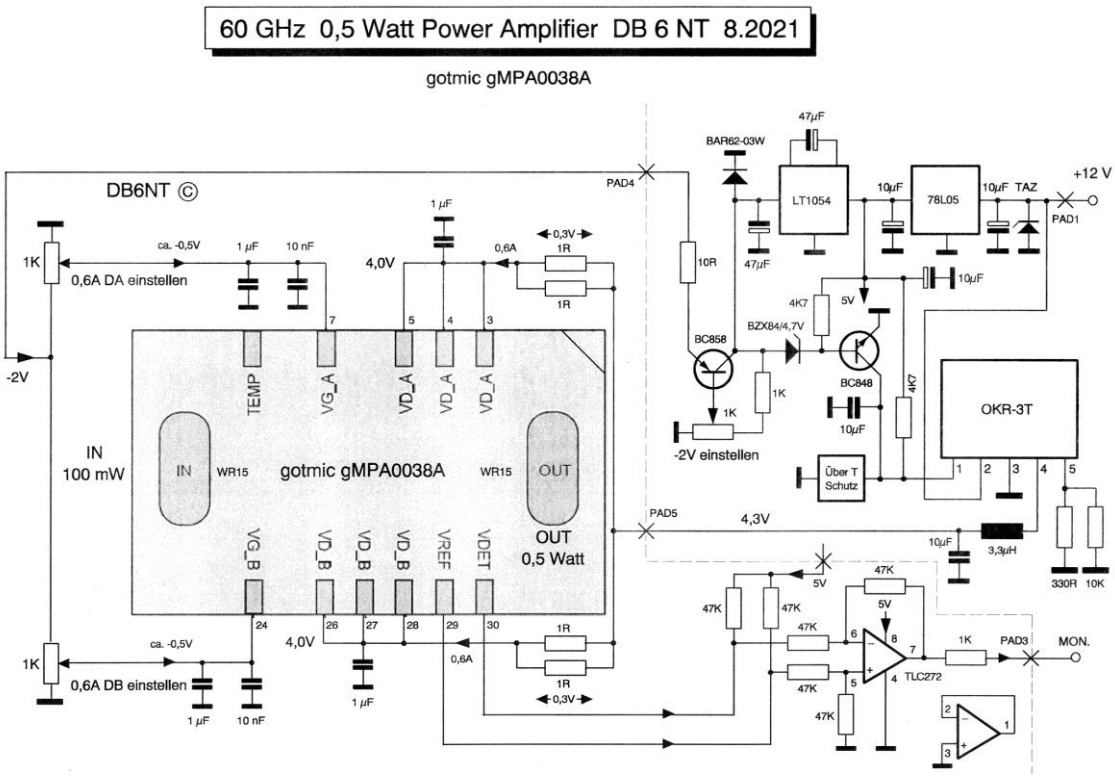

I built two of these amps. The adjustment is very easy. First you set the minus gate bias to maximum, approx. -2V. After the operating voltage has been applied, the respective operating current is then set. This is to be measured at the two parallel connected 1 ohm resistors. Nothing more is required. Now it is controlled with approx. 100 mW HF and the output power is measured.
The maximum control power of the amplifier is specified with 200 mW.
An amplifier reached >620 mW at 61 GHz and >420 mW at 67 GHz.
The other copy at both frequencies >500 mW. That matches the manufacturer's promised data quite well.

The amplifiers have a monitor output. This enables the output power to be controlled. The output DC voltage is proportional to the output power.

The amplifier is supplied with power via a step-down controller. It is also very efficient in terms of efficiency to save the battery in portable operation. The controller is also monitored and can switch off if there is no negative voltage or if the housing temperature is too high.

Now the assembly of the 60 GHz multiplier module and the PA as well as the doubler module to generate the 122/134 GHz frequency takes place. A small, flat heat sink is installed to cool the assembly. This also serves to mechanically stabilize the unit. Power is supplied via strain-relieved cables.
The LO frequency is controlled from the oscillator via a coaxial cable. The oscillator assembly is an **MKU LO 8-13 PLL**, which is also used for the other frequencies. This oscillator is powered by a 10 MHz OCXO from **MORION** Inc. Type. **MV103a** controlled. This type has proven itself for many years. It is very fast at the operating frequency and has a very high return accuracy even at 241 GHz.
A feed of an external 10 MHz GPS disciplined oscillator is also provided.
The CW keying is also done via a function of the PLL oscillator. This function is already built in.

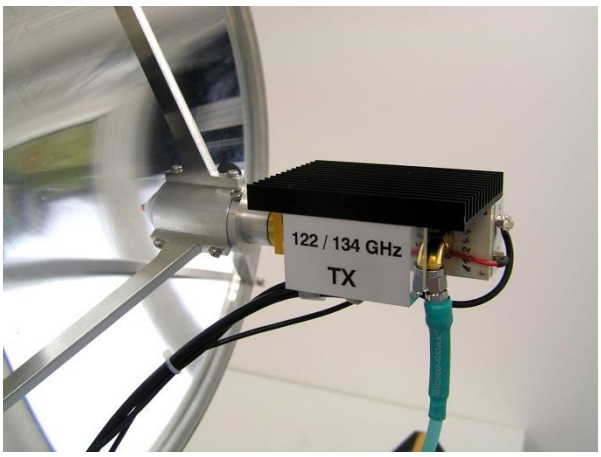

The fully assembled HF unit of the CW transmitter can be seen here. This unit has a 20 mm socket with a WR8 waveguide as a radiator and can be exchanged for other units such as converters.

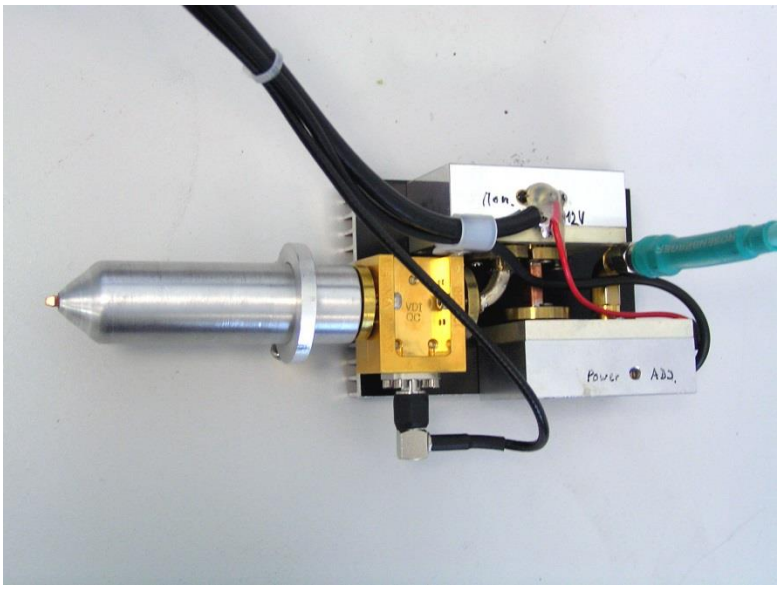

The measurement protocol of the doubler from **VDI** shows the efficiency over the frequency. That should be 30% at 122 GHz and 25% at 134 GHz.

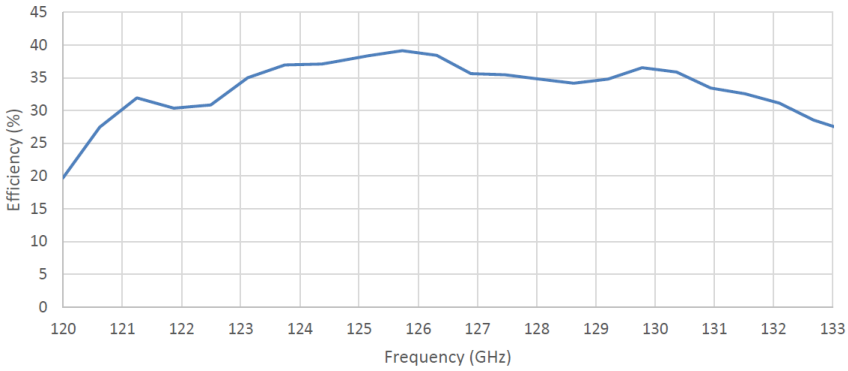

The power measurement at 122/134 GHz showed a display of> 100 mW. Here is also the stop of my PROCOM power meter with connected self-made diode measuring head. I will do a measurement with a calibrated power meter at a later date. The "closing" of the waveguide with a finger produced a small stabbing pain ...
The 200 mW are only distributed over the 2mm area of the waveguide opening. A further proof of HF performance was obtained by illuminating an absorber mat while observing it with a thermal imaging camera.

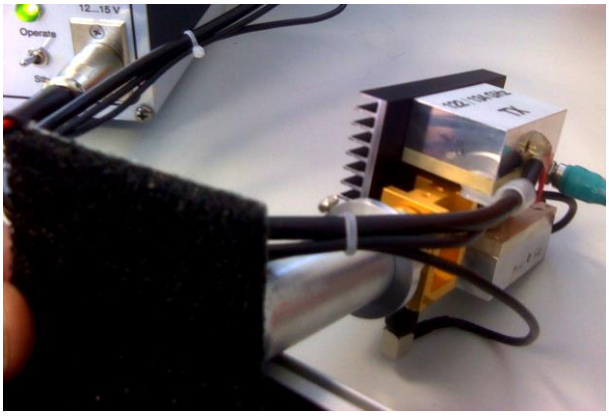

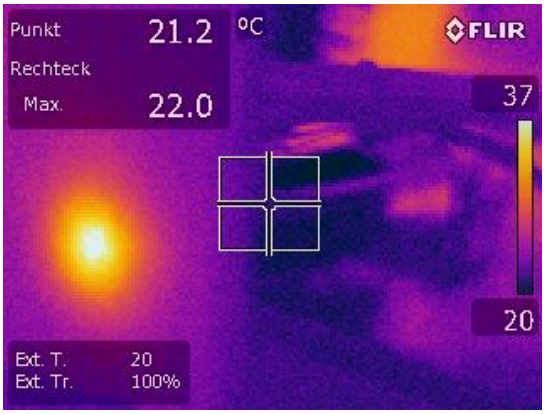

Sources and References:

Technical data of **gXSB0019A** und **gAPZ0039A sowie gMPA0038A**
https://www.gotmic.se/

Sigurd Werner DL9MFV: Oszillatoraufbereitung für 122 GHz:
Frequenzvervielfacher auf 61 GHz und Signalverstärkung
UKW- Berichte 1/2013

Sigurd Werner DL9MFV: Verbesserte Frequenzverdoppler für 122 GHz
UKW- Berichte 3/2014

Sigurd Werner DL9MFV: Frequenzverdoppler für 122 GHz im Zwei-Schalenaufbau
UKW- Berichte 3/2013

Michael Kuhne DB6NT: Signalerzeugung für die mm-Wellen Bänder
http://www.db6nt.de/fileadmin/userfiles/_pdf/download_archiv/Signal%20Erzeugung%20fu%CC%88r%20die%20mm-Wellen%20Ba%CC%88nder2.pdf

Michael Kuhne DB6NT: CW Sender für die mm-Wellen Bänder 122 -134 und 241 GHz
http://www.db6nt.de/fileadmin/userfiles/_pdf/download_archiv/CW%20Sender%20fu%CC%88r%20die%20mm.pdf

SALUT ELECS Ltd. Dioden Daten:
http://www.db6nt.de/fileadmin/userfiles/_pdf/download_archiv/Elecs.pdf

MACOM Diode **MA46H146**:
https://cdn.macom.com/datasheets/MAVR-000146.pdf

MACOM Diode **MA4E1310**:
https://cdn.macom.com/datasheets/MA4E1310.pdf

Teledyne GaAs Millimeter Wave/Sub-Millimeter Wave Schottky Diodes:
http://www.teledyne-si.com/products-and-services/scientific-company/gaas-millimeter-wave-sub-millimeter-wave-schottky-diodes

ACST GmbH Dioden: http://www.acst.de/
Virginia Diodes, Inc.: https://vadiodes.com/en/products-6/w-and-g-band-diodes
Teratech Dioden: http://www.teratechcomponents.com/

Teledyne mmWave MMIC-Power Amplifier:
http://www.teledyne-si.com/products-and-services/scientific-company/mm-wave-and-thz-pa-chips

DB6NT Download Archiv: http://www.db6nt.de/download-archiv.html