CW transmitter for the mm-wave bands 122 - 134 and 241 GHz

DB6NT

Most millimeter-wave mixers used in amateur radio are subharmonic mixers, which are also used for transmitting. The generated transmission power is usually about 0.2 mW SSB or even less. If harmonics mixers are used instead, the SSB power is still far smaller (about 10 - 50 µW). Since the access to power amplifier chips and their processing is very difficult and expensive, the way of frequency multiplication offers itself. Here is the description of how I realized a 3-band transverter equipped with an additional CW transmitter.

The CW transmitter for 122 and 134 GHz uses as frequency processing the same circuit and circuit board as the transverter and is equipped instead of the subharmonic mixer with a varactor diode for frequency doubling. The diode used is from Russian production of SATUT ELECS Ltd. with the designation A92220-1 [1]. The diode has a self-capacitance of 30 fF and can be controlled with 30 mW. Unfortunately, the company has stopped production. The achieved output power to 122 GHz is about 1 - 2 mW.

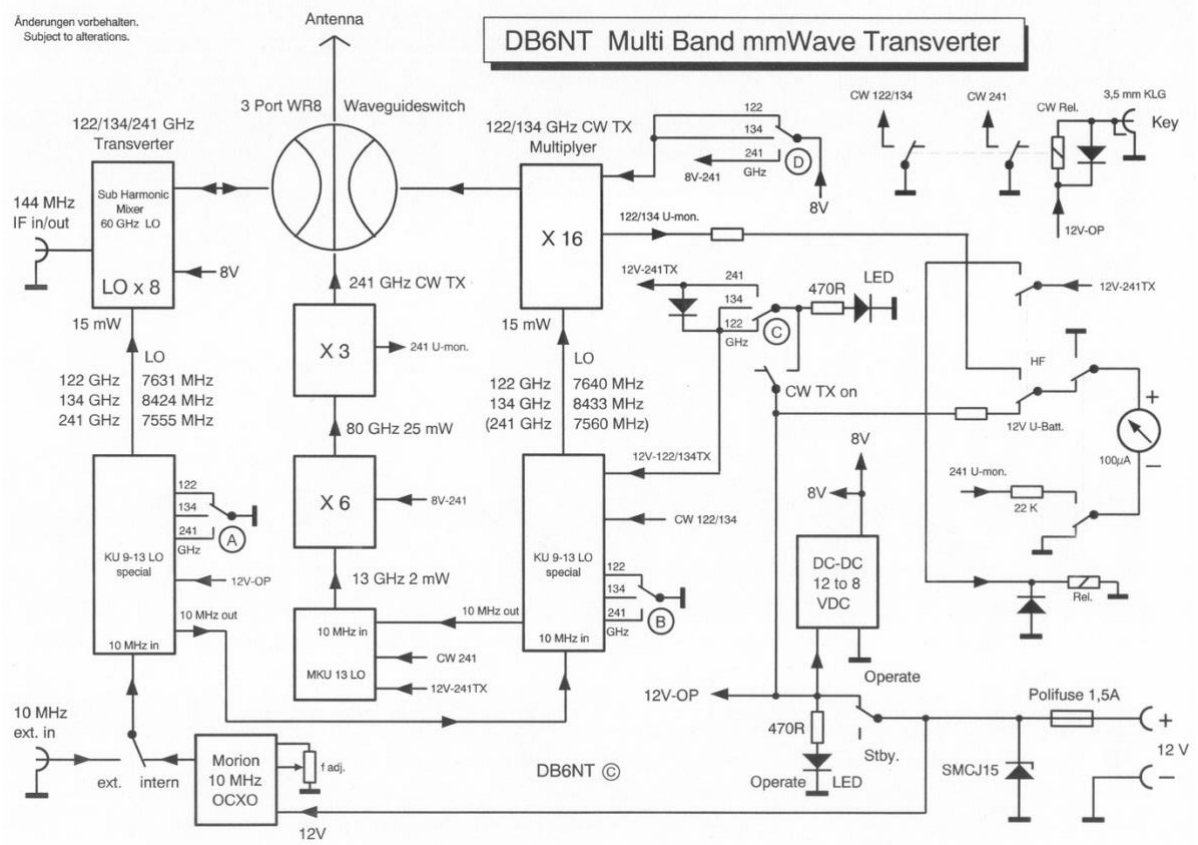

Here is the block diagram of the entire station. With the waveguide switch you can switch from Tranverter operation to the CW transmitter. Once the position for 122/134 GHz and then the position 241 GHz. The three way switch is a WR8 version with approx. 0.5 dB attenuation at 122/134 GHz. The switch also works at 241 GHz (high-pass behavior of the waveguide). A higher mode formation in the waveguide is accepted.

Block diagram of the 122/134 GHz CW transmitter

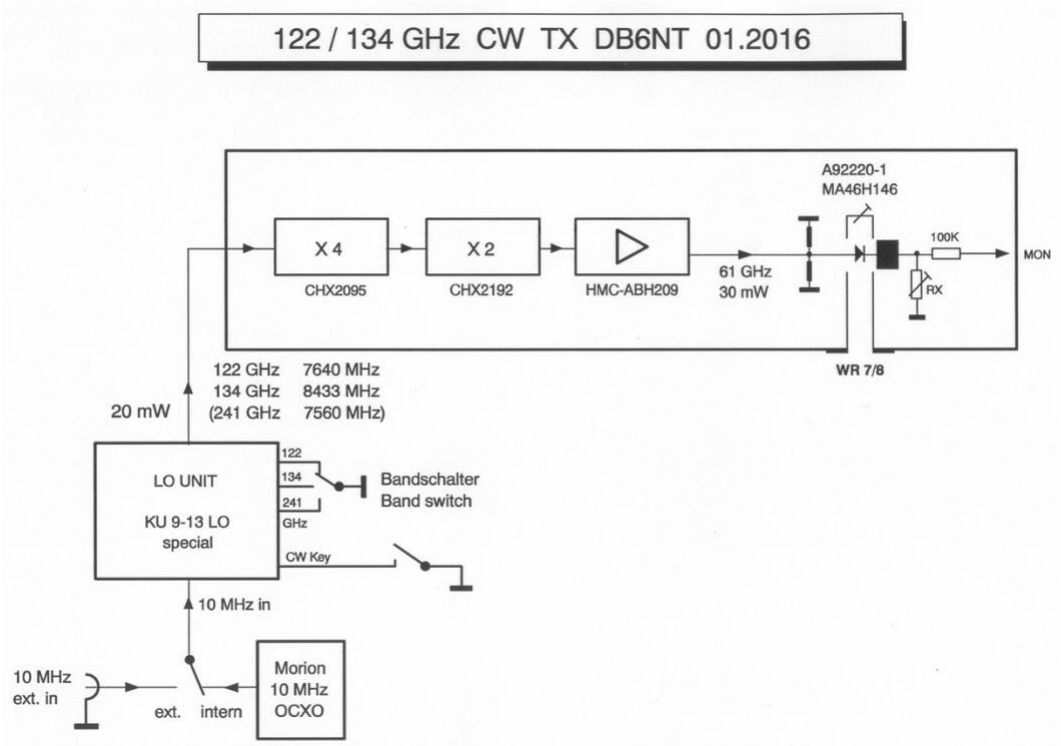

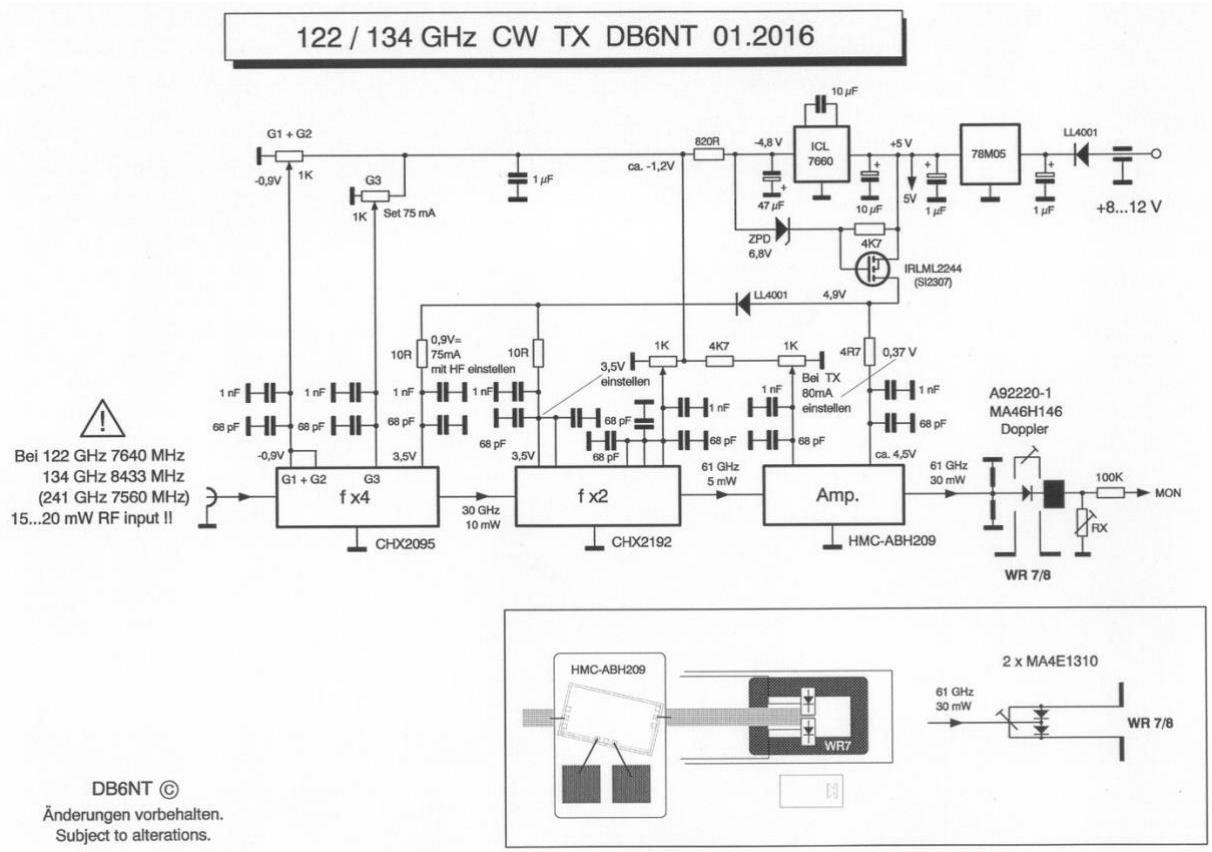

An experiment with two MA4E1310 Schottky diodes in double-path switching yielded approximately 5 mW at 122 GHz. This circuit was very critical in construction. Even the adjustment was very difficult and is not reproducible.

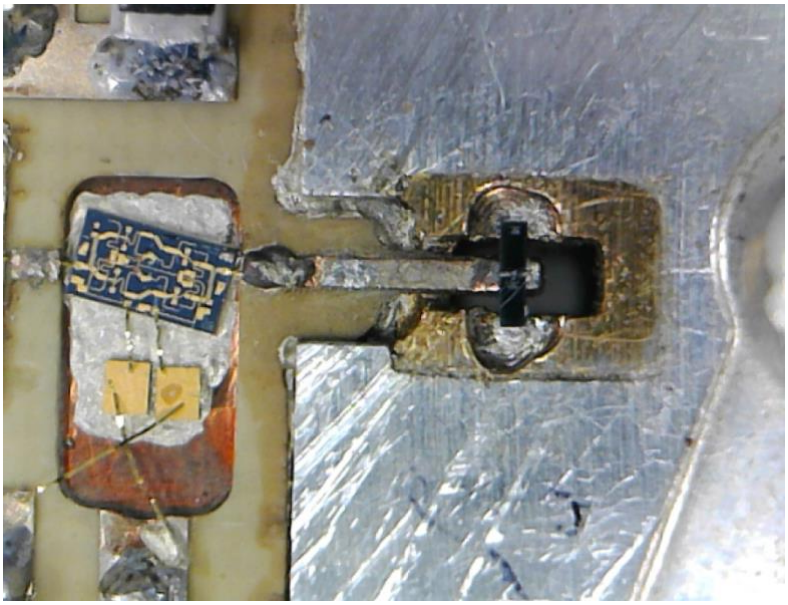

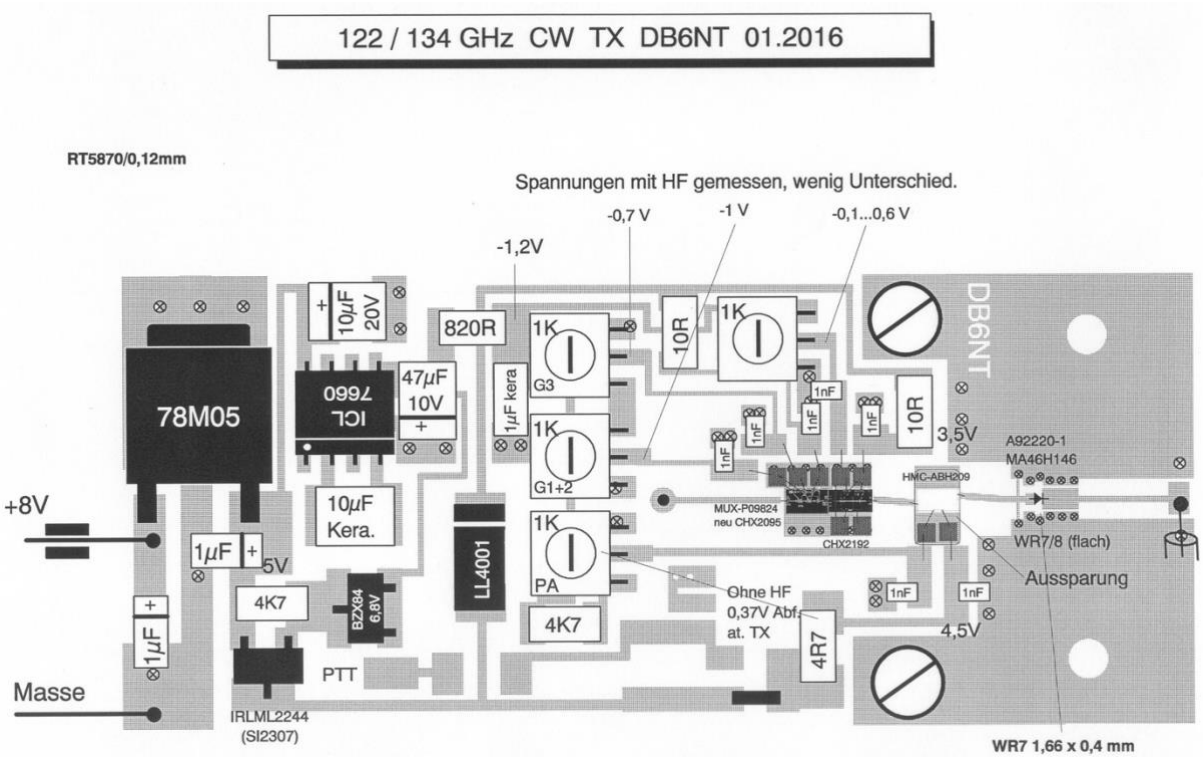

The assembly plan of the CW transmitter

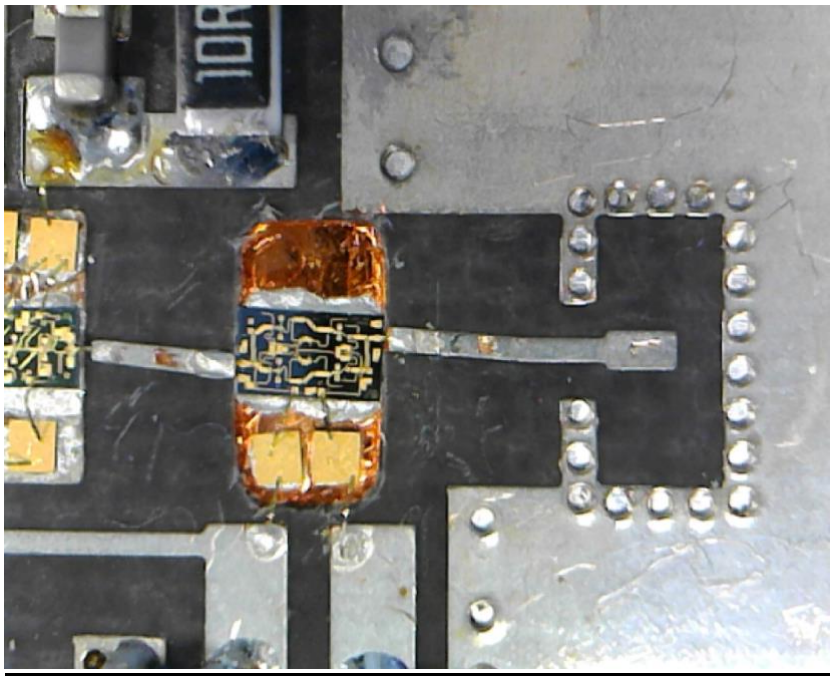

Here is the version of the oscillator circuit with waveguide transition to WR12

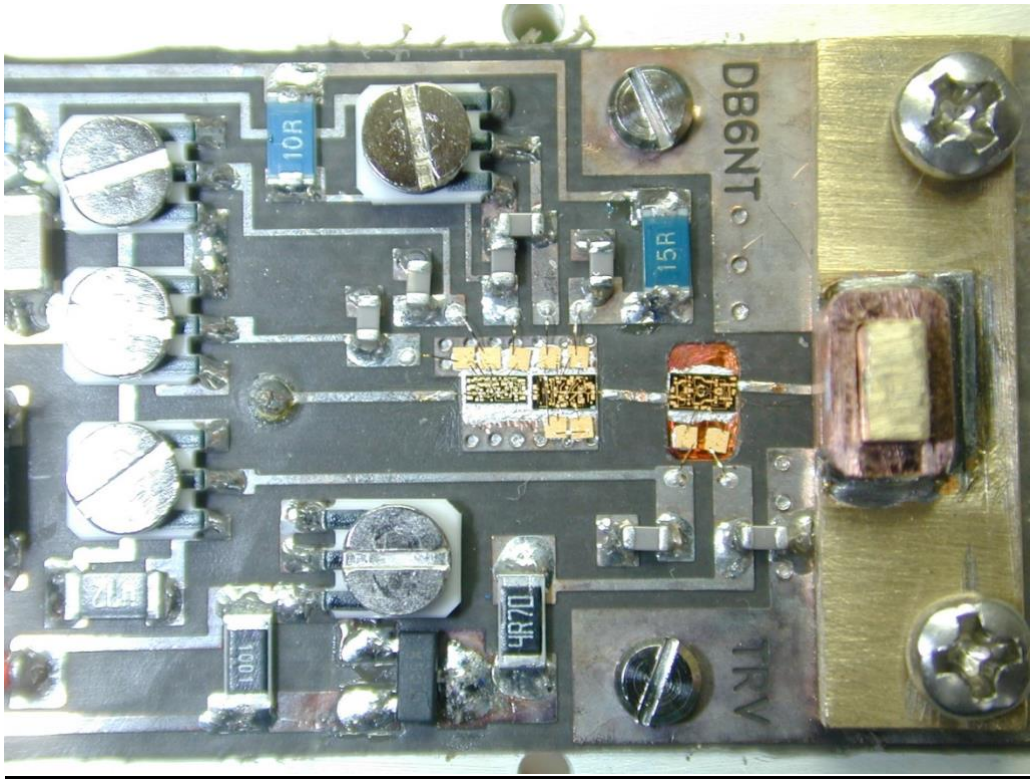

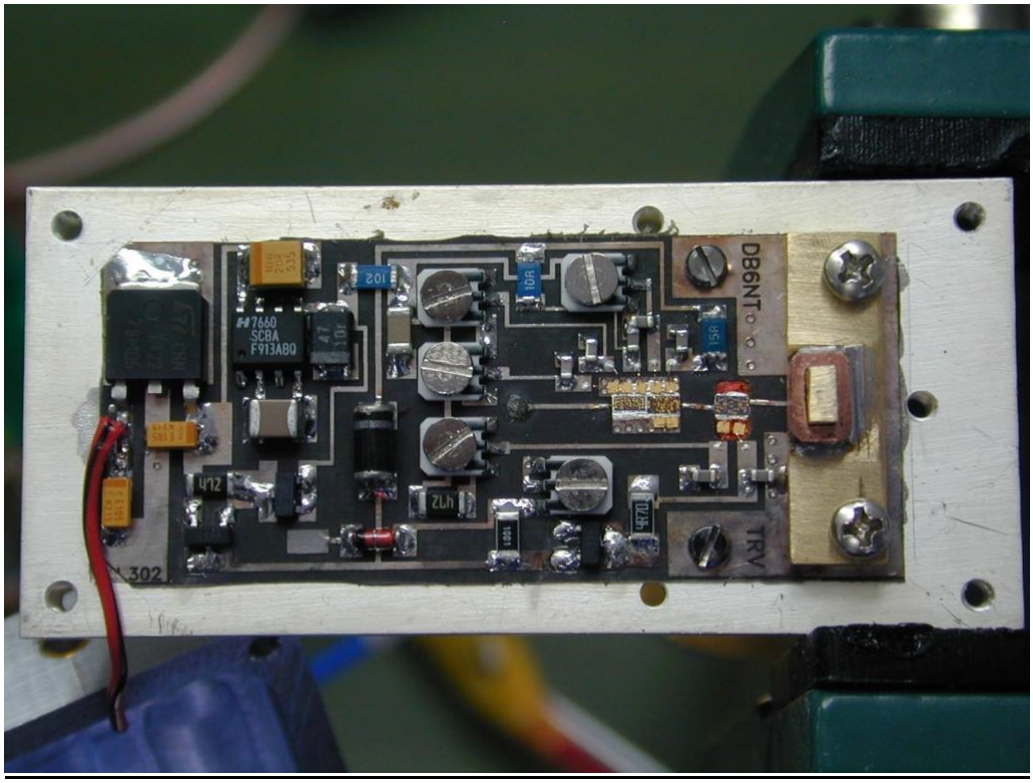

This version of the LO is intended to drive an external multiplier.

The block diagram of the 241 GHz CW transmitter

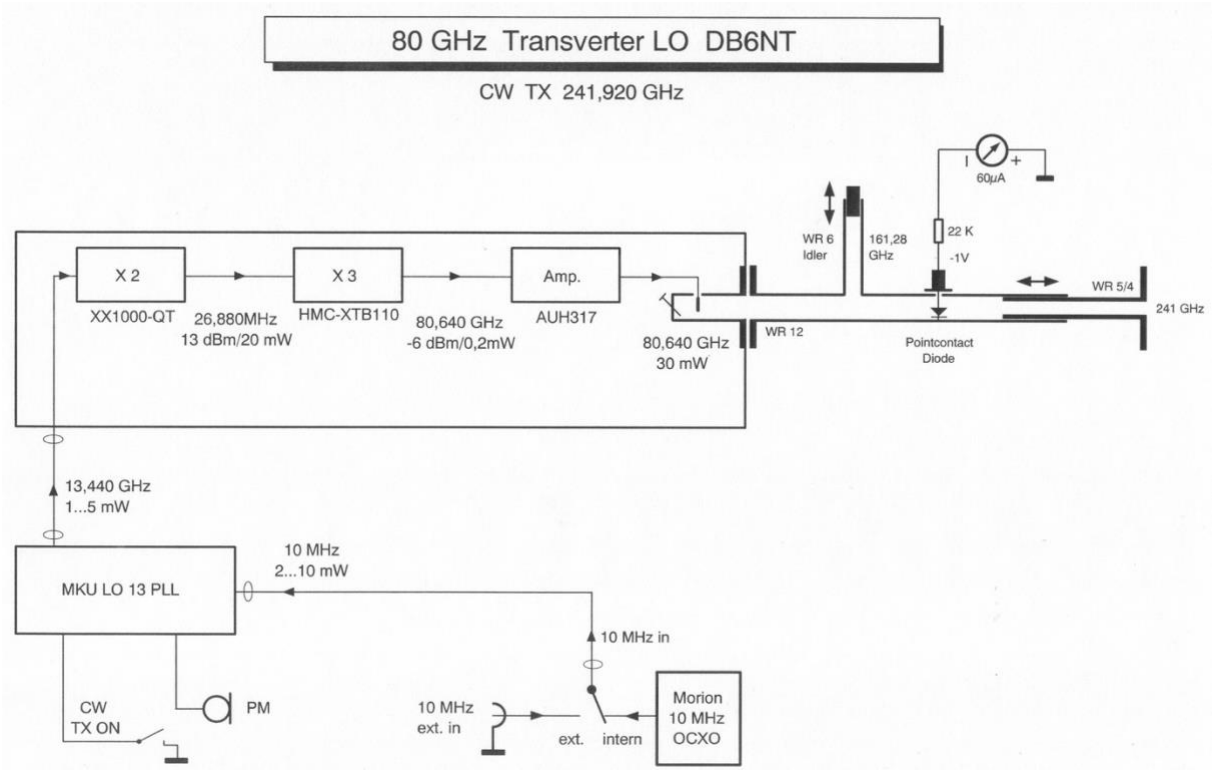

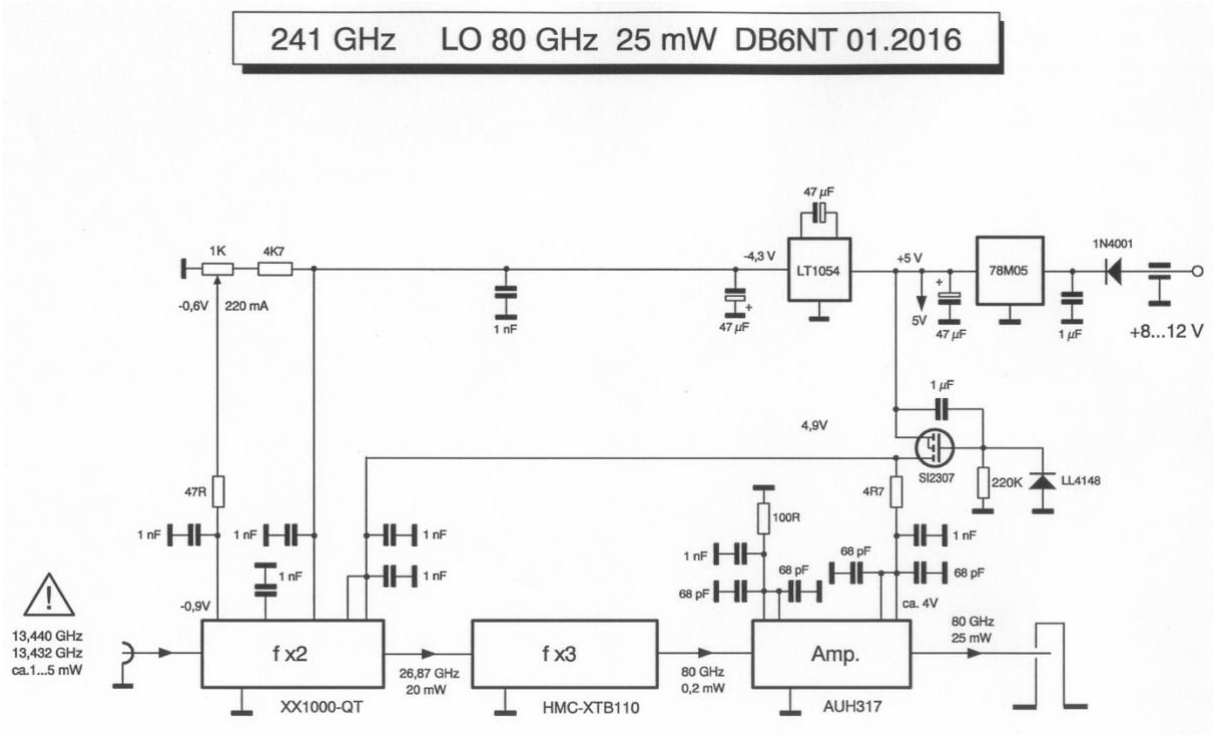

Assembly plan of the circuit board

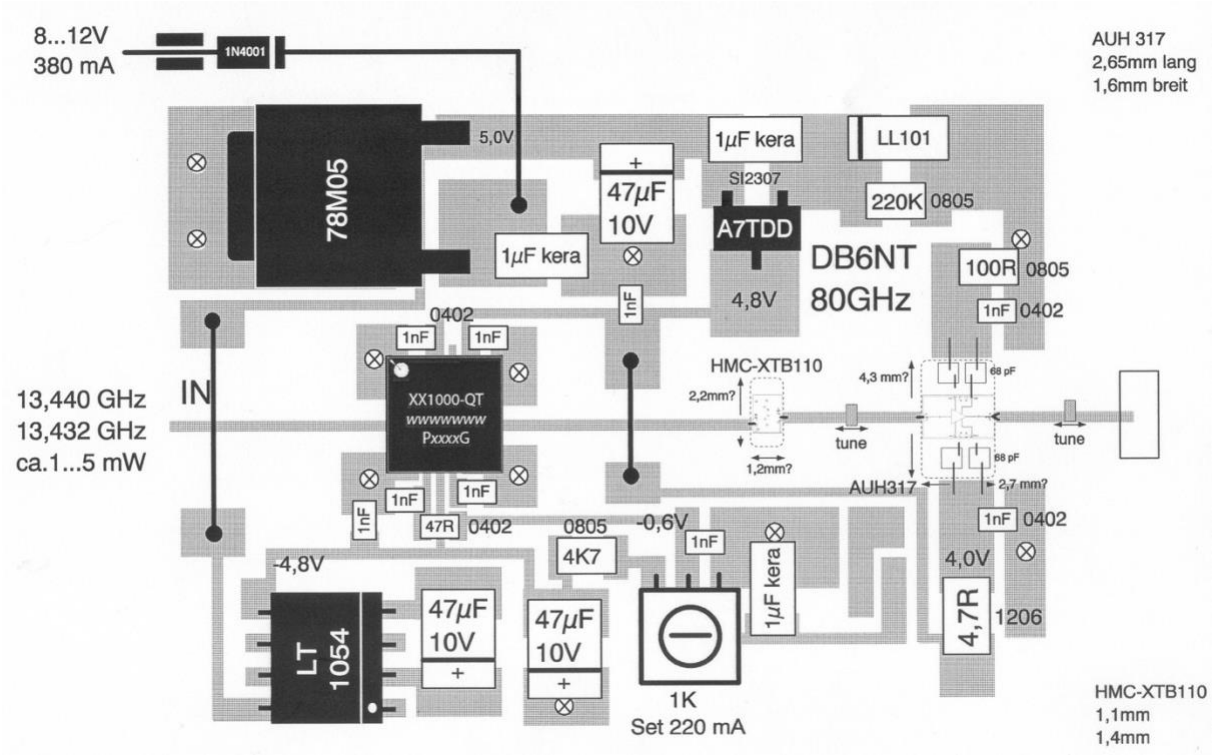

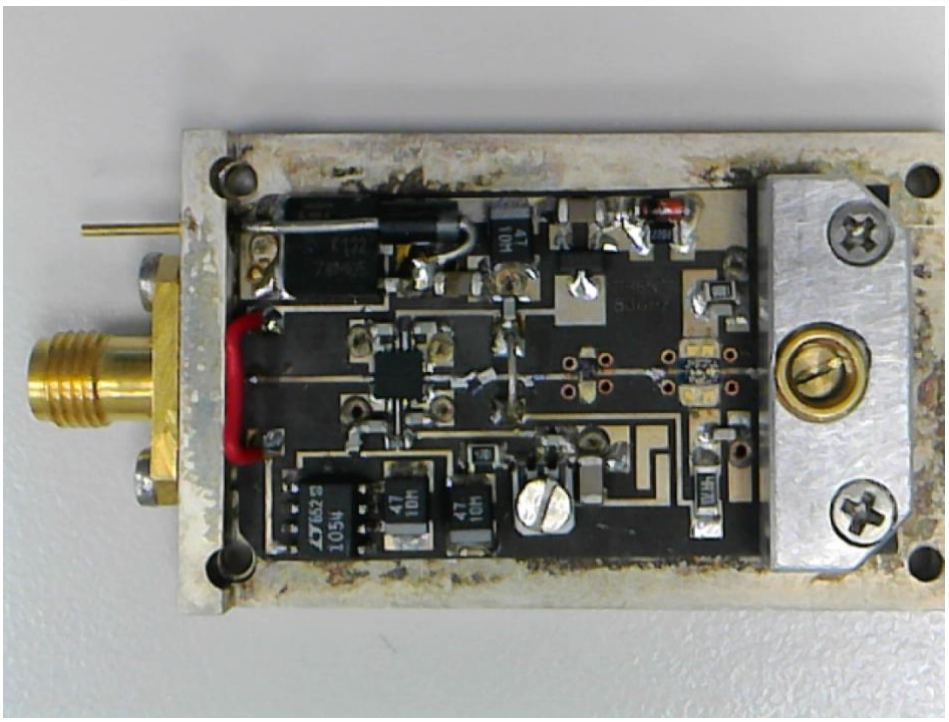

As a tripler from 80 to 241 GHz, I use a module that I got from Surplus inventories. You can build something similar yourself, but it is mechanically very challenging to produce.
A diode mounted directly on the PCB behind the AUH317 and above the waveguide should also work well. This arrangement would then be a similar method as I use with the 122/134 GHz CW transmitter. In my opinion this way is probably the easier solution. The missing Idlerkreis presumably will slightly reduce the output power. I will try this version in the future.

Here is the tripler

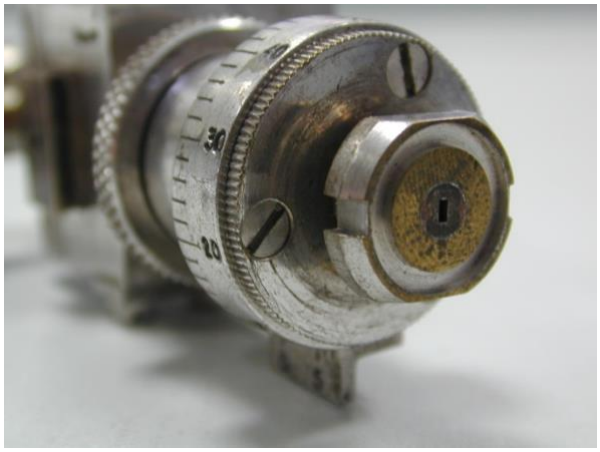

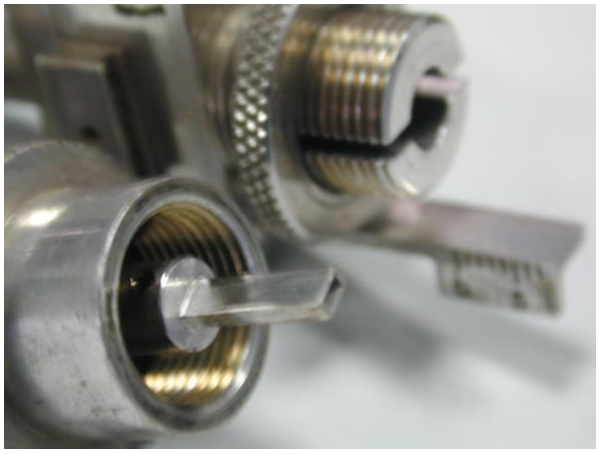

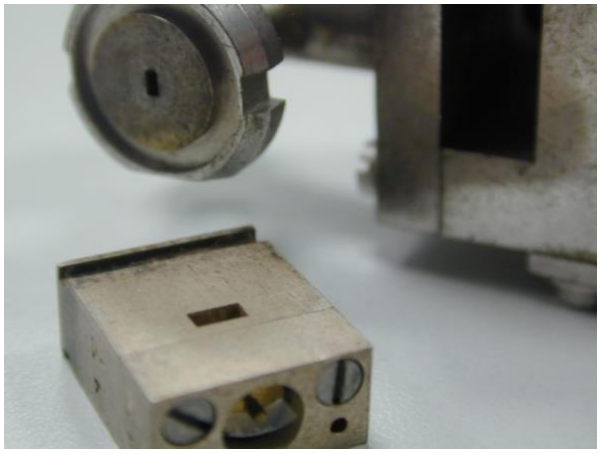

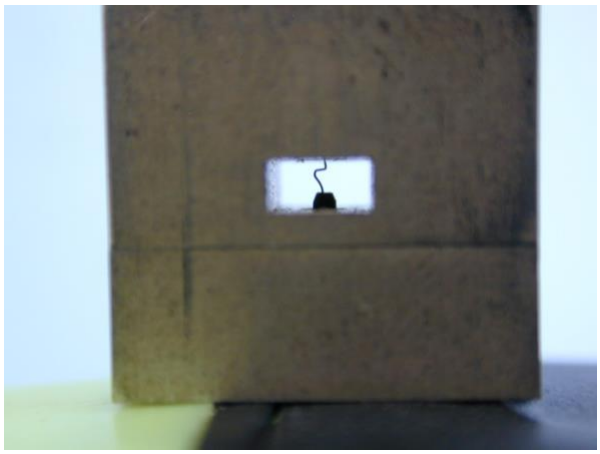

Point contact diode in WR12 waveguide

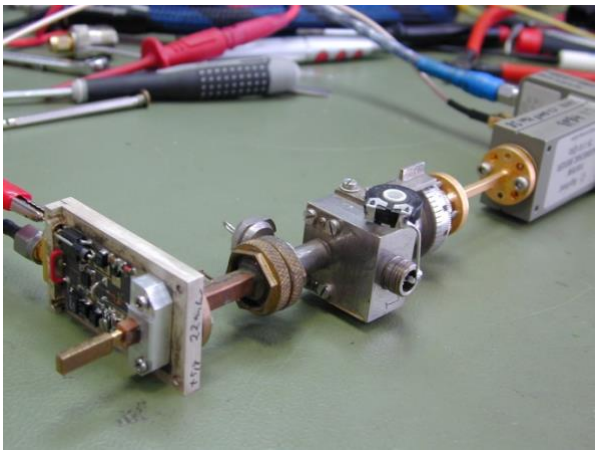

Measurement setup with HP11970W mixer for spectrum analyzer

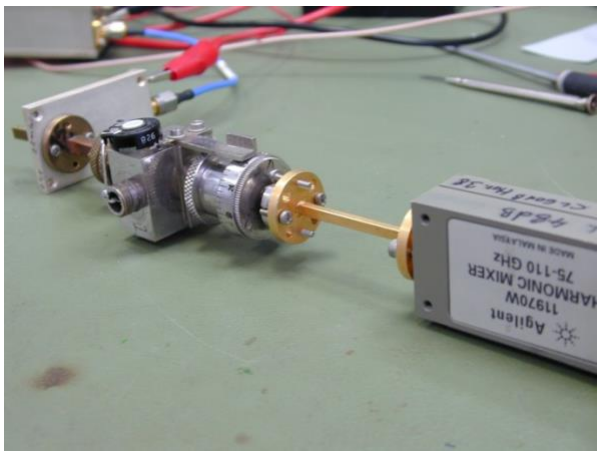

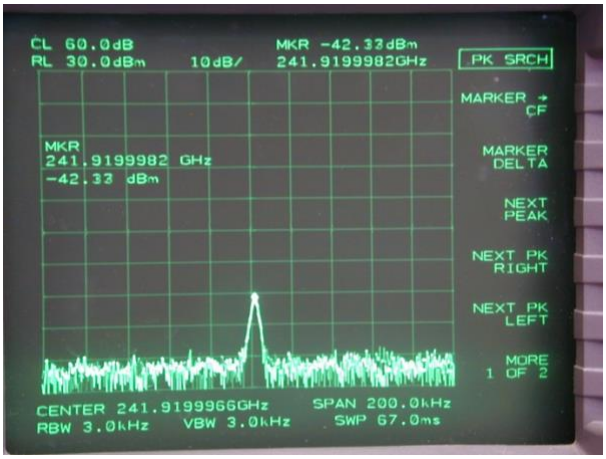

The Harmonic Mixer HP11970W is calibrated only up to 110 GHz, but it can be used for the comparison and display on our amateur bands 122 - 134 - 241 GHz.

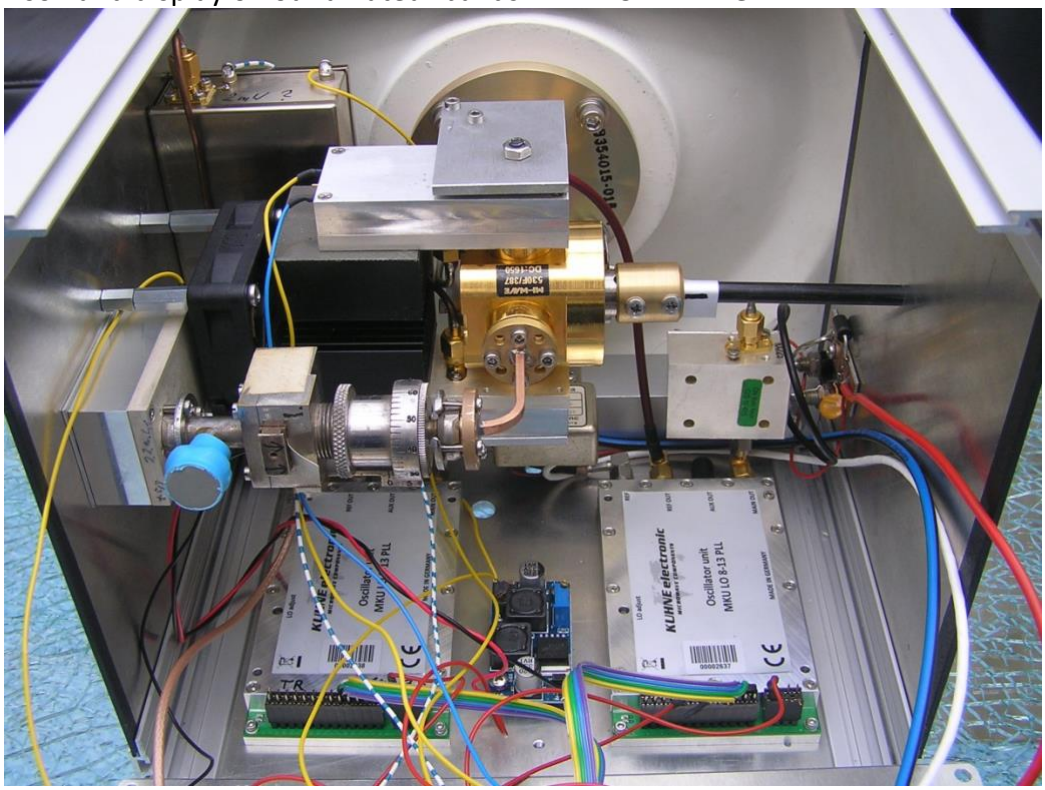

Construction of the complete station

Source and literature references:

[1] SALUT ELECS Ltd. Diode Data:
http://www.db6nt.de/fileadmin/userfiles/_pdf/download_archiv/Elecs.pdf

MACOM Diode MA46H146:
https://cdn.macom.com/datasheets/MAVR-000146.pdf

MACOM Diode MA4E1310:
https://cdn.macom.com/datasheets/MA4E1310.pdf

Teledyne GaAs Millimeter Wave/Sub-Millimeter Wave Schottky Diodes:
http://www.teledyne-si.com/ps-sub-mm-diodes.html

ACST GmbH Diodes: http://www.acst.de/

Virginia Diodes, Inc.: https://vadiodes.com/en/products-6/w-and-g-band-diodes

Teledyne 241 GHz MMIC-Power Amplifier:
http://www.teledyne-si.com/ps-mmic-power-amplifier.html

DB6NT Download Archiv: http://www.db6nt.de/download-archiv.html